HAMAMATSU
PHOTON IS OUR BUSINESS

CW Quantum Cascade Laser
L12004-2209H-C

■ Features

- Emission wavelength: 4.53 µm (Typ.)
- Output power: 20 mW (Min.)
- Threshold current: 1.0 A (Max.)

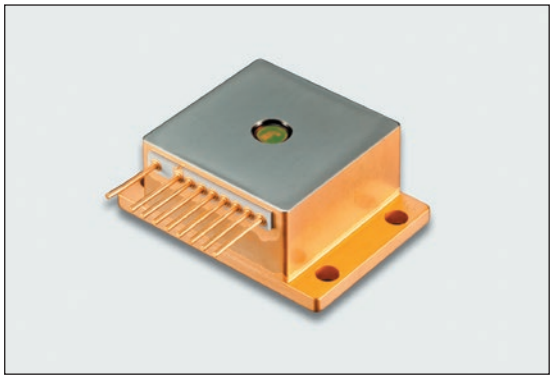

■ Applications

- Trace gas analysis (N_2O)

■ Outline

Quantum Cascade Lasers, using structures of SPC (Single Phonon-Continuum) depopulation and DFB (Distributed Feedback), emit CW (Continuous Wave) mid-IR laser under room temperature.
By controlling the chip's operating temperature through the Peltier element installed in the HHL package, it is possible to tune the emission wavelength without mode hopping while keeping longitudinal single mode operation.

■ Absolute and characteristics

$T_{op(qcl)}$) = +20 °C, unless otherwise specified.

Parameter	Symbol	Ratings	Unit
Forward current *1	I_f	This product has individual difference. Confirm data sheet attached to a product *2	A
Forward voltage *1	V_f		V
Reverse voltage *1	V_r	0.0	V
Change speed of forward current *3	—	5	mA/s
TEC current (cooling mode) *4	I_c	+3.7	A
TEC current (heating mode) *4		-1.5	A
TEC voltage	V_c	±13.0	V
Operating temperature (case) *5*6	$T_{op(c)}$	+10 to +60	°C
Operating temperature (QCL) *7	$T_{op(qcl)}$	0 to +55	°C
Change speed of operating temperature *8	—	10	°C/min
Storage temperature *5	T_{stg}	-20 to +65	°C

*1 Confirm data sheet attached to a product. Sensitive to electrical surges and instability. Reverse current/voltage cause damage in laser specifications and out of warranty.
*2 Necessary specifications of power supply: $I_f \geq 1.3$ A, $V_f \geq 16$ V.
*3 Speed when changing the forward currrent (I_f).
*4 Even if TEC current (I_c) is below the absolute maximum, insufficient heat dissipation from this product may cause damage in laser and TEC specifications and out of warranty. Especially there are possibilities of damage, degradation and less reliability when TEC is operated in heating mode since heated-up side (laser chip) is thermally isolated from case of package and ambience. Refer to schematic configuration in 3-2-4.
*5 Avoid water condensation.
*6 Temperatures of case (body) of HHL-package.
*7 Temperatures of QC-laser when operated; should be monitored by the built-in thermistor for $T_{op(qcl)}$.
*8 Speed when changing the operation temperature ($T_{op(qcl)}$) controlled by the built-in TEC.

■ Specifications (laser)

Parameter	Symbol	Condition	Min.	Typ.	Max.	Unit
Operating temperature (QCL) *2	$T_{op(qcl)}$	K *1=2209 cm^{-1}	+10	—	+50	°C
Spectral linewidth *3	ΔK_L	K *1=2209 cm^{-1}	—	—	0.2 *4	cm^{-1}
Wavenumber tuning range *5	ΔK_T	K *1=2209 cm^{-1}	±1.0	—	—	cm^{-1}
Radiant power	Φ_e	K *1=2209 cm^{-1}	20	—	—	mW
Threshold current	I_{th}	$T_{op(qcl)}$=+20 °C	—	—	1.0	A
Side mode suppression ratio	SMSR	$T_{op(qcl)}$=+20 °C	25 *4	—	—	dB

*1 K: Emission wavenumber (cm^{-1}).
*2 This product is able to emit the target wavenumber at a certain $T_{op(qcl)}$ within the specified temperature range.
*3 WHM.
*4 These values are limited by resolution and singnal-to-noise ratio of instrument when tested.
*5 Continuously wavenumber scan range; Center of the tunability range is the emission wavenumber (K).

CW Quantum Cascade Laser L12004-2209H-C

Figure 1: Typical characteristics

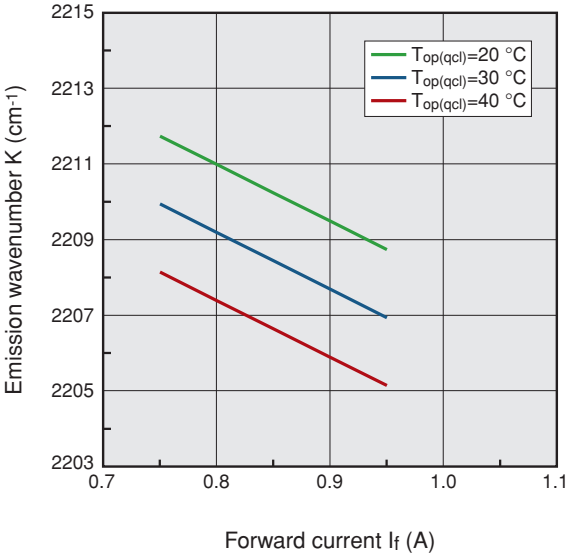

Parameter	Symbol	Condition	Typical values	Unit
Temperature coefficient of wavenumber	δK_T	I_f=const.	-0.18	$cm^{-1}/°C$
Current coefficient of wavenumber	δK_C	$I_{op(qcl)}$=const.	-0.015	cm^{-1}/mA

■ TEC

Parameter	Symbol	Condition	Specification	Unit
Maximum temperature difference	ΔT_{max}	T_h=27 °C, in N_2, Q_c=0, I_c=+3.7 A	>40	°C
Maximum heat pumping capacity	Q_{cmax}	T_h= 27 °C, in N_2, I_c=+3.7 A, ΔT=0	>18	W
AC resistance	ACR	T_h=27 °C, 1 kHz	2.5 ± 0.3	Ω

* ΔT: Temperature difference
Q_c: Heat pumping capacity
I_c: TEC current
T_h: Temperature of TEC's hot side surface (TEC: cooling mode)

■ Thermistor

Parameter	Symbol	Condition	Specification	Unit
Resistance	R_{25}	25 °C	10 kΩ ± 2.5 %	—
Beta value	B	0 °C / 100 °C	3450 K	—

* Same specifications for both thermisters of $T_{op(qcl)}$ and $T_{op(c)}$.

Figure 2: Thermistor configurations (schematic)

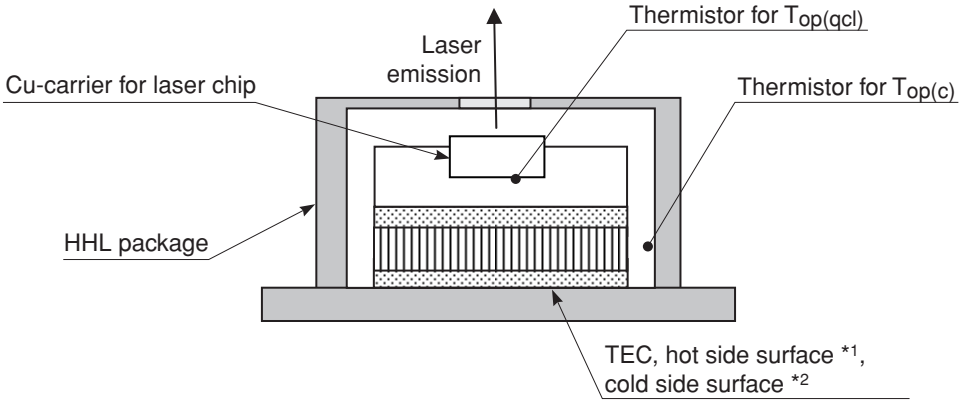

*1 when TEC is operated in cooling mode.
*2 when TEC is operated in heating mode.

■ Window of HHL package

Parameter		Specification	Unit
Material		ZnSe, Plano-Plano	—
Dimension	Clear aperture *1	ϕ4.4	mm
	Thickness	0.7	mm
Coating	Coating	BBAR, both surface	—
	Bandwidth	2500 to 1250	cm^{-1}
	Transmittance *2	>96	%

*1 Mechanical aperture of HHL package.
*2 Average in the bandwidth.

Figure 3: Typical transmittance curve of the window

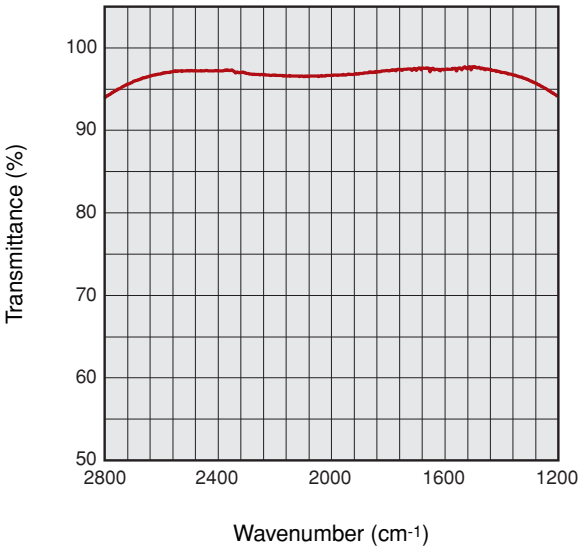

■ Necessary specifications of power supply for the laser (QCL)

Parameter	Specification	Unit
Output current	≥1.3	A
Output voltage	≥16	V
Function	Surge protect	—
	Constant current control	—

Figure 4: Dimensional outline and pin connection (unit: mm)

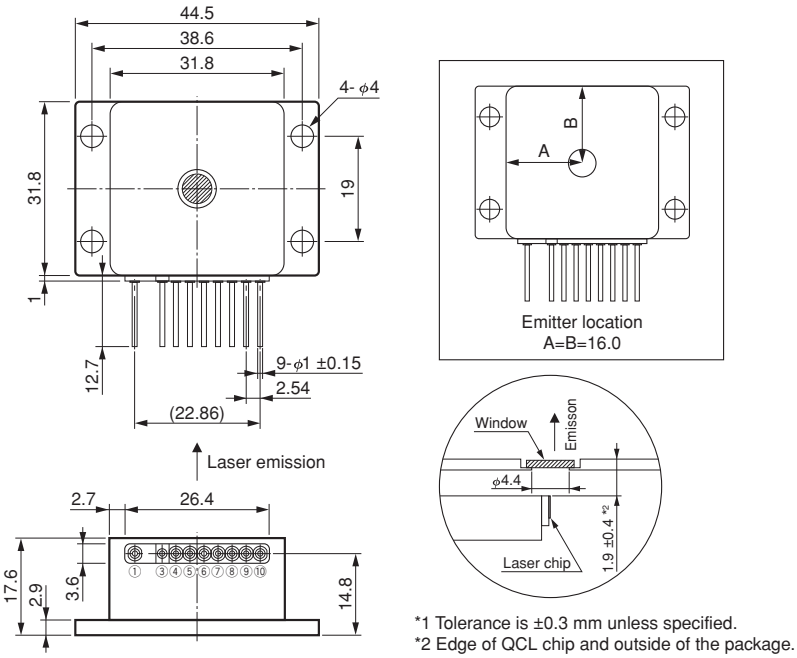

*1 Tolerance is ±0.3 mm unless specified.
*2 Edge of QCL chip and outside of the package.

Pin No. *3	Function	Pin No. *3	Function
①	TEC cathode (-)	⑦	QCL cathode (-)
③	N.C.	⑧	Thermistor, ($T_{op(c)}$)
④	QCL anode (+)	⑨	Thermistor, ($T_{op(c)}$)
⑤	Thermistor, ($T_{op(qcl)}$)	⑩	TEC anode (+)
⑥	Thermistor, ($T_{op(qcl)}$)	—	—

*3 Pin of ③ is electrically connected to the case; package body. Other all pins are floating to the case.

Warning (Class 3B Laser)
Invisible laser radiation: Avoid exposure to beam

●The laser radiation emitted from this product is an invisible laser beam that cannot be seen by the human eye. This product falls within "Class 3B Laser" according to IEC 60825-1 laser product classification.
Always comply with IEC 60825-1 safety standards when using this product.

Class 3B Laser
Warning label Explanatory label

LGQF0707203CS

●Information described in this material current as of October 2023. Specifications are subject to change without notice.

HAMAMATSU PHOTONICS K.K. **www.hamamatsu.com**

HAMAMATSU PHOTONICS K.K., Solid State Division
1126-1 Ichino-cho, Higashi-ku, Hamamatsu City, 435-8558 Japan, Telephone: (81)53-434-3311, Fax: (81)53-434-5184
U.S.A.: HAMAMATSU CORPORATION: 360 Foothill Road, Bridgewater, NJ 08807, U.S.A., Telephone: (1)908-231-0960, Fax: (1)908-231-1218 E-mail: usa@hamamatsu.com
Germany: HAMAMATSU PHOTONICS DEUTSCHLAND GMBH.: Arzbergerstr. 10, 82211 Herrsching am Ammersee, Germany, Telephone: (49)8152-375-0, Fax: (49)8152-265-8 E-mail: info@hamamatsu.de
France: HAMAMATSU PHOTONICS FRANCE S.A.R.L.: 19 Rue du Saule Trapu, Parc du Moulin de Massy, 91882 Massy Cedex, France, Telephone: (33)1 69 53 71 00, Fax: (33)1 69 53 71 10 E-mail: infos@hamamatsu.fr
United Kingdom: HAMAMATSU PHOTONICS UK LIMITED: 2 Howard Court,10 Tewin Road, Welwyn Garden City, Hertfordshire, AL7 1BW, UK, Telephone: (44)1707-294888, Fax: (44)1707-325777 E-mail: info@hamamatsu.co.uk
North Europe: HAMAMATSU PHOTONICS NORDEN AB: Torshamnsgatan 35, 16440 Kista, Sweden, Telephone: (46)8-509-031-00, Fax: (46)8-509-031-01 E-mail: info@hamamatsu.se
Italy: HAMAMATSU PHOTONICS ITALIA S.R.L.: Strada della Moia, 1 int. 6 20044 Arese (Milano), Italy, Telephone: (39)02-93 58 17 33, Fax: (39)02-93 58 17 41 E-mail: info@hamamatsu.it
China: HAMAMATSU PHOTONICS (CHINA) CO., LTD.: 1201, Tower B, Jiaming Center, 27 Dongsanhuan Beilu, Chaoyang District, 100020 Beijing, P.R. China, Telephone: (86)10-6586-6006, Fax: (86)10-6586-2866 E-mail: hpc@hamamatsu.com.cn
Taiwan: HAMAMATSU PHOTONICS TAIWAN CO., LTD.: 13F-1, No.101, Section 2, Gongdao 5th Road, East Dist., Hsinchu City, 300046, Taiwan(R.O.C) Telephone: (886)3-659-0080, Fax: (886)3-659-0081 E-mail: info@hamamatsu.com.tw

Cat. No. LQCL2005E05
OCT. 2023 IP