HAMAMATSU
PHOTON IS OUR BUSINESS

Photosensor with front-end IC

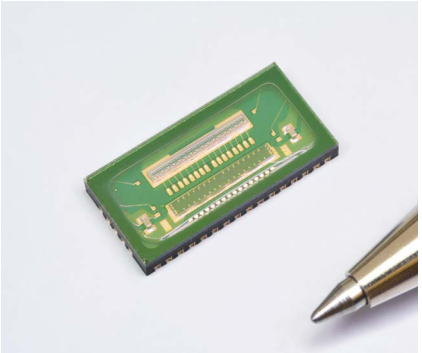

S14137-01CR

Compact 16-element APD array suitable for various light level detection (parallel output)

The S14137-01CR is a compact optical device that integrates a 16-element APD array and a preamp. The incident light pulse is converted into a voltage pulse, and then the converted pulse is output. It has a built-in DC feedback circuit for reducing the effects of background light. The parallel output 16-element array enables simultaneous measurement of all pixels.

Features

- **16 ch parallel output**
- **High-speed response: 180 MHz**
- **Reduced background light effects**
- **Small waveform distortion when excessive light is incident**

Applications

- **Distance measurement (e.g., LiDAR)**

Structure

Parameter	Symbol	Specification	Unit
Detector	-	Si APD array	-
Photosensitive area (per element)	A	0.15 × 0.43	mm
Element pitch	-	0.5	mm
Number of elements	-	16	-
Number of output	-	16	-
Package	-	Plastic	-

Absolute maximum ratings

Parameter	Symbol	Condition	Value	Unit
Supply voltage (for preamp)	Vcc max		4.5	V
Reverse voltage (for APD)	V_APD		0 to V_{BR}	V
Photocurrent (DC)	I_L max		0.2	mA
Incident pulse light level	Ppulse		1	W
Operating temperature	Topr	No dew condensation*1	-40 to +105	°C
Storage temperature	Tstg	No dew condensation*1	-40 to +125	°C
Soldering temperature*2	Tsol		260 (twice)	°C

*1: When there is a temperature difference between a product and the surrounding area in high humidity environment, dew condensation may occur on the product surface. Dew condensation on the product may cause deterioration in characteristics and reliability.
*2: Reflow soldering, JEDEC J-STD-020 MSL 3, see P.8
Note: Exceeding the absolute maximum ratings even momentarily may cause a drop in product quality. Always be sure to use the product within the absolute maximum ratings.

Electrical and optical characteristics (Ta=25 °C, Vcc=3.3 V, AC coupling + 50 Ω, without DC light, per pixel)

Parameter	Symbol	Condition	Min.	Typ.	Max.	Unit
Spectral response range	λ			420 to 1150		nm
Peak sensitivity wavelength	λp	M=100	-	840	-	nm
Photosensitivity	S	λ=905 nm, M=50	-	36	-	kV/W
Breakdown voltage	V_{BR}	I_D=100 μA	150	175	200	V
Temperature coefficient of breakdown voltage	ΔTV_{BR}		-	1.1	-	V/°C
Sensitivity uniformity	-	M=50 (average over all pixels)	-30	-	+30	%
Dark current	I_D	M=50	-	0.1	1	nA
Current consumption	Ic	Total sum of pixels	-	70	90	mA
Low cutoff frequency	fcl		-	4	-	MHz
High cutoff frequency	fch		140	180	-	MHz
Equivalent input power noise	e_n	f=100 MHz, M=50	-	150	220	$fW/Hz^{1/2}$
Output voltage level	-		0.65	1.15	1.65	V
Output impedance	Zo	f=100 MHz	-	50	80	Ω
Maximum output voltage amplitude	Vp-p max		0.2	0.5	-	V
Supply voltage	Vcc		3.135	3.3	3.465	V
Crosstalk*3	-	FWHM=4 ns, =1 mW	-	-40	-	dB

*3: Crosstalk [dB] = $20 \log_{10} \left(\frac{\text{Crosstalk [V]/TIA gain [V/W]}}{\text{Incident pulse light level [W]}} \right)$

Distance measurement method

Distance L is calculated from the speed of light c and the time difference Td between the light source's light emission timing and sensor output.

L = (1/2) × c × Td

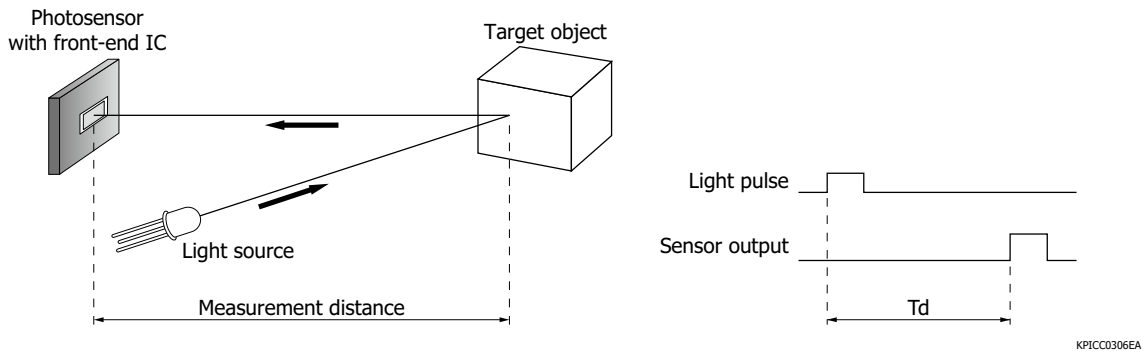

Spectral response

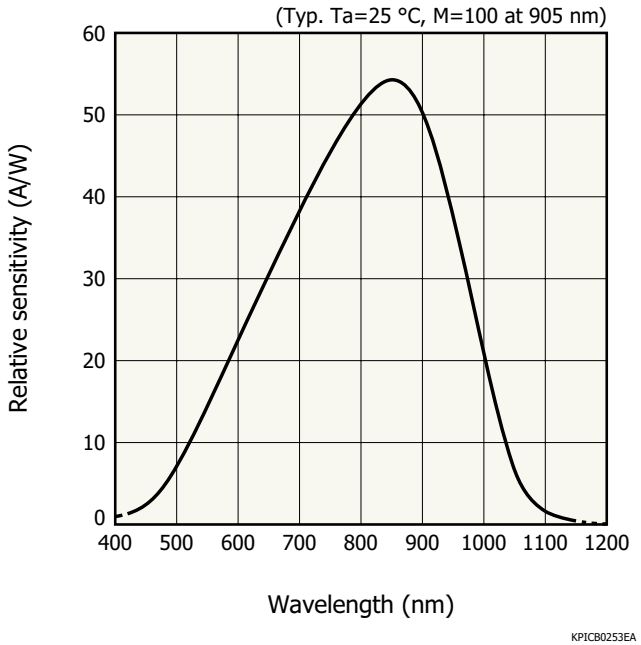

Dark current vs. reverse voltage

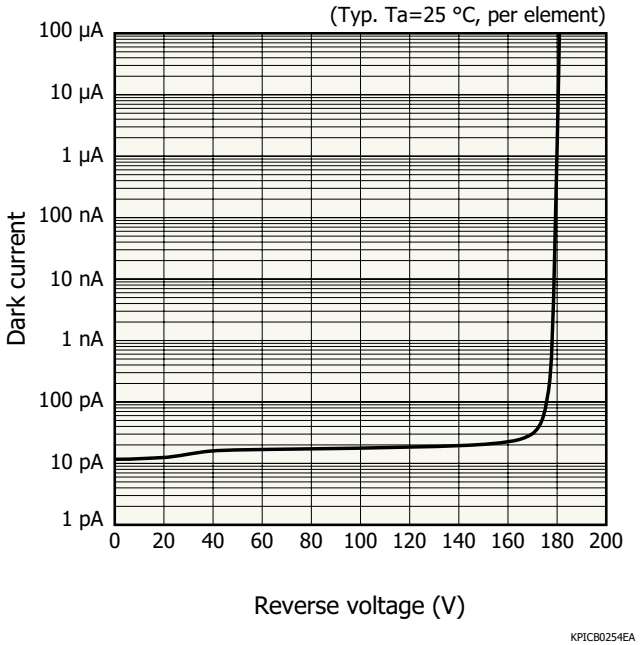

Frequency characteristics

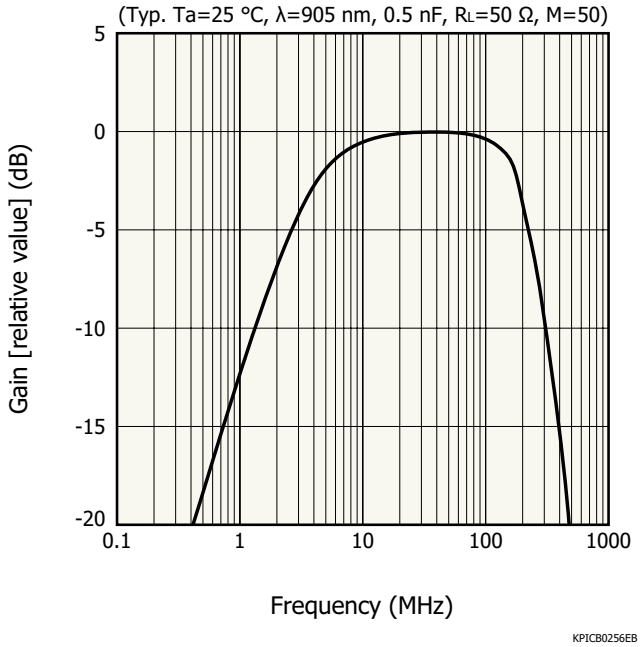

Current consumption vs. ambient temperature (typical example)

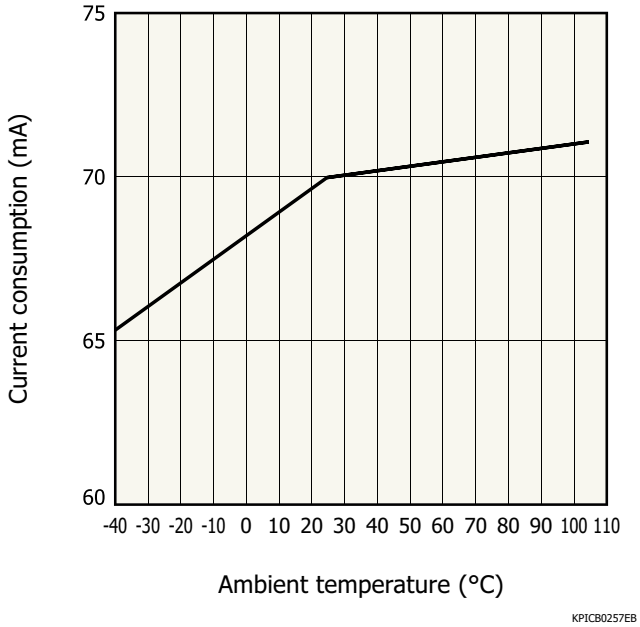

Gain vs. reverse voltage

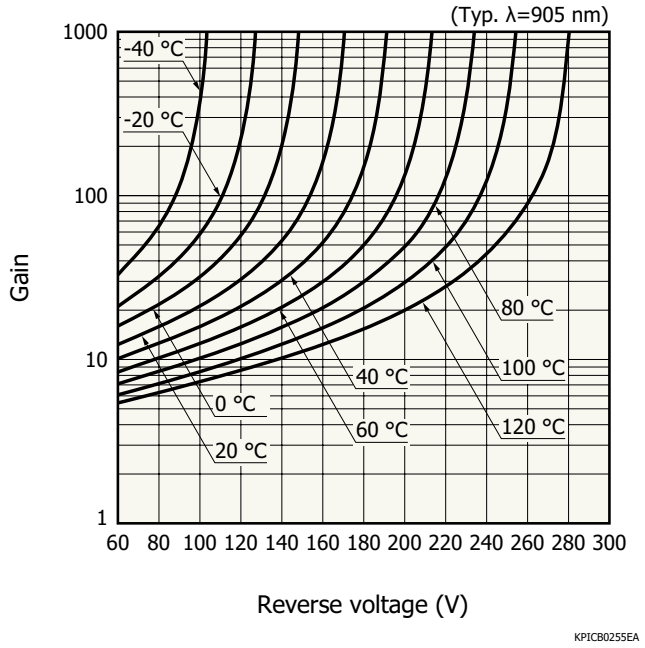

Block diagram

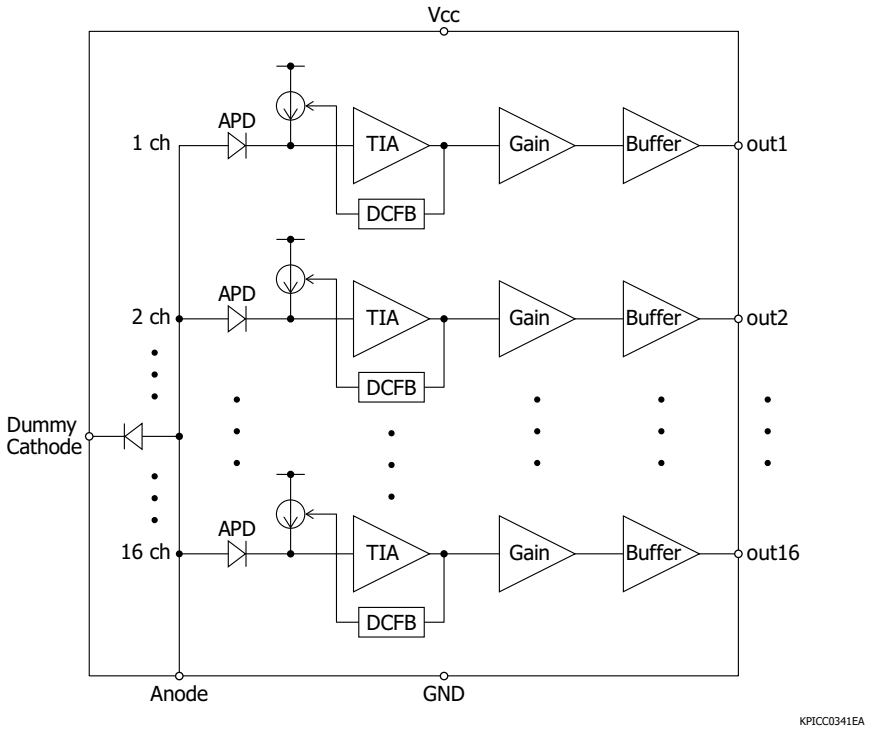

Output waveform examples

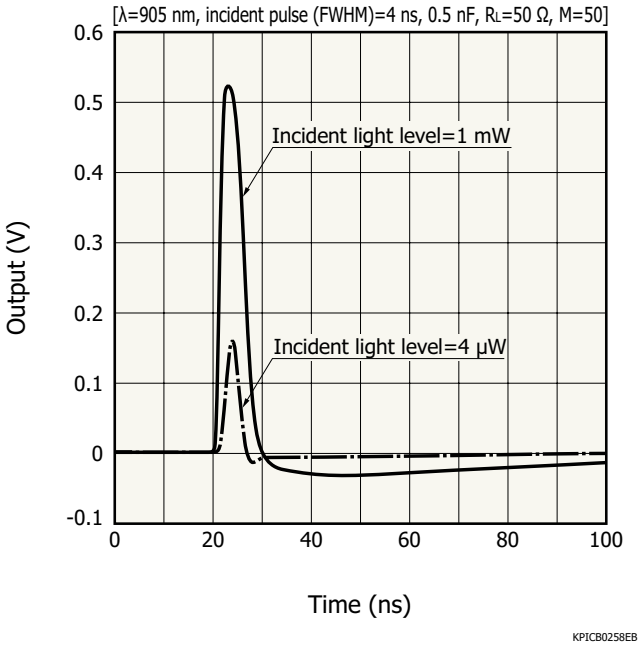

Dimensional outline (unit: mm)

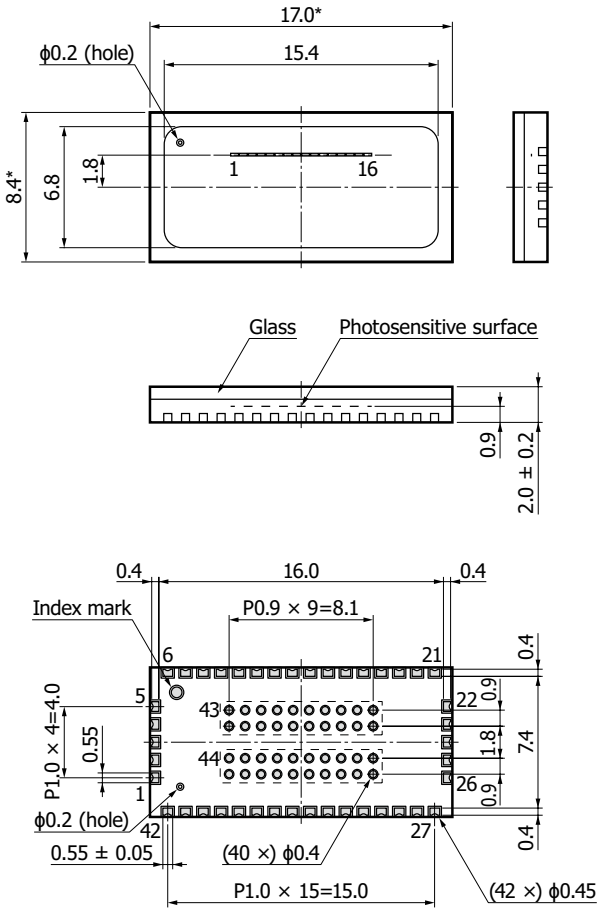

Tolerance unless otherwise noted ±0.25, ±2.5°
Chip position accuracy with respect to package dimensions marked *
X, Y≤±0.3, θ≤±2.5°
Au plating

KPICA0112EA

Pin connections

Pin no.	Function	Pin no.	Function
1	NC	23	GND
2	Vcc	24	GND
3	GND	25	Vcc
4	GND	26	NC
5	GND	27	Dummy cathode
6	out1	28	NC
7	out2	29	NC
8	out3	30	NC
9	out4	31	Anode
10	out5	32	Anode
11	out6	33	Anode
12	out7	34	Anode
13	out8	35	Anode
14	out9	36	Anode
15	out10	37	Anode
16	out11	38	Anode
17	out12	39	NC
18	out13	40	NC
19	out14	41	NC
20	out15	42	Dummy cathode
21	out16	43	GND
22	GND	44	NC

Note: Leave NC (1, 26, 28 to 30, 39 to 41) open; Do not connect to Vcc or GND.

Enlarged view of photosensitive area (unit: mm)

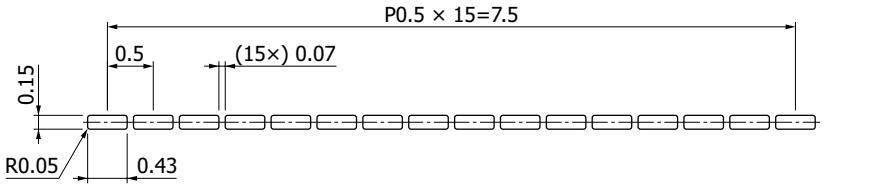

KPICC0342EA

Recommended land pattern (unit: mm)

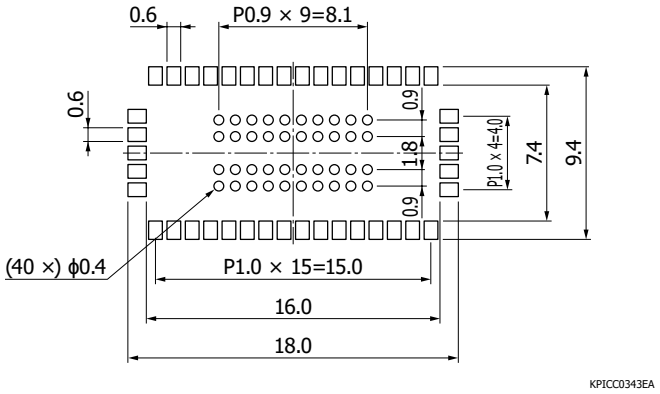

Application circuit example (50 Ω system, evaluation kit: C14779-03)

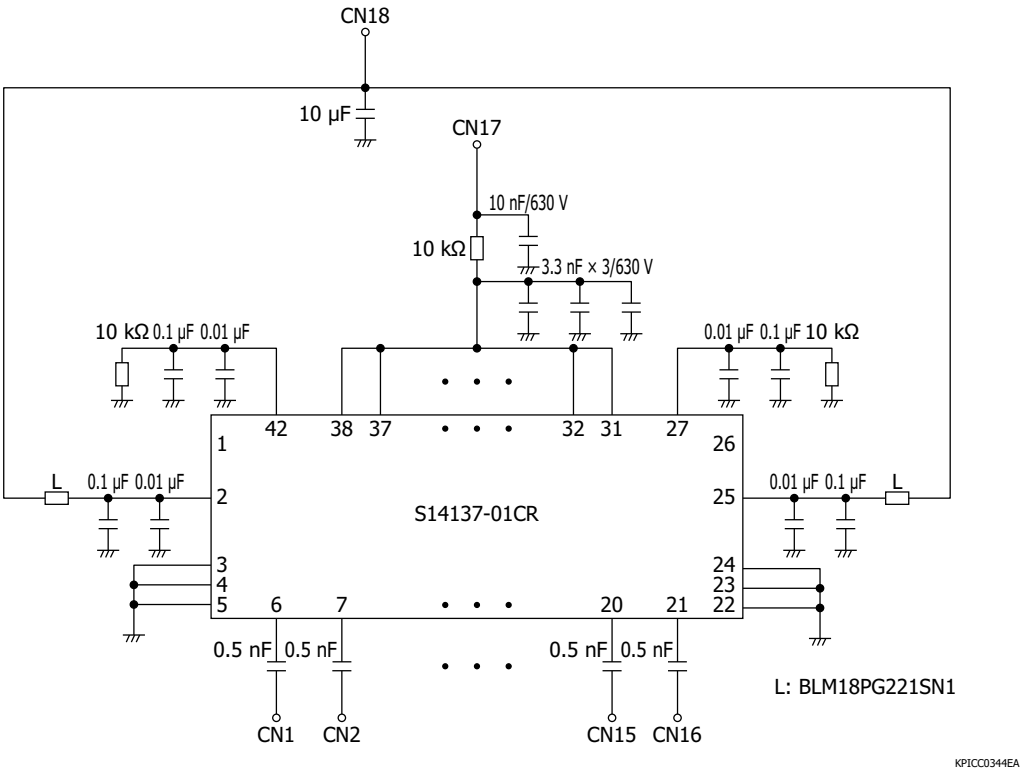

Handling of the temperature characteristics of the APD gain

The gain of the APD built into the photosensor with front-end IC varies depending on the temperature. The following two methods are available for handling this issue in using the sensor over a wide temperature range.

① Temperature compensation method that controls reverse voltage according to temperature changes
Place temperature sensor such as a thermistor near the APD to measure the temperature of the APD. The reverse voltage after APD temperature correction is expressed by the following equation using temperature T of APD.

V_R (after temperature correction) = V_R (at 25 °C) + (T - 25) × ΔTV_{BR}

② Temperature control method to keep APD temperature constant
A TE-cooler or an equivalent device is used to keep APD temperature constant.

Precautions

- Do not do cleaning or vapor phase soldering, as cleaning liquid or water may get inside the package through the air hole on the bottom of the package.
- Apply high voltage to the anode terminal. Beware of electric shock.
- Apply negative voltage with respect to GND (-100 V, etc.) to the anode terminal.
- The top of the package is glass. Be careful not to pinch it too hard with metal tweezers, as this can cause cracks or flakes.

Recommended reflow soldering conditions

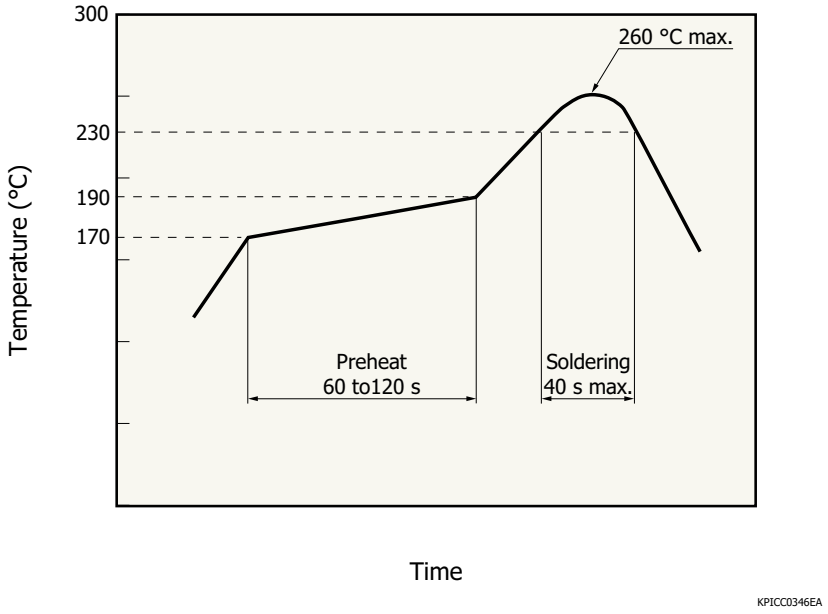

- This product supports lead-free soldering. After unpacking, store it in an environment at a temperature of 30 °C or less and a humidity of 60% or less, and perform soldering within 24 hours.
- The effect that the product receives during reflow soldering varies depending on the circuit board and reflow oven that are used. When you set reflow soldering conditions, check that problems do not occur in the product by testing out the conditions in advance.

Related information

www.hamamatsu.com/sp/ssd/doc_en.html

■ Precautions
· Disclaimer
· Metal, ceramic, plastic package products
· Surface mount type products

Evaluation kit for photosensor with front-end IC C14779-03

Evaluation kit equipped with S14137-01CR is available. Refer to the application circuit example (P.7) for the equivalent circuit. Contact us for detailed information.

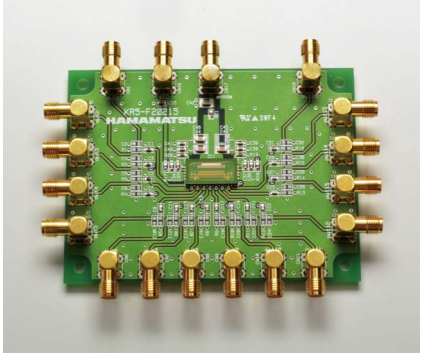

Information described in this material is current as of July 2024.
Product specifications are subject to change without prior notice due to improvements or other reasons. This document has been carefully prepared and the information contained is believed to be accurate. In rare cases, however, there may be inaccuracies such as text errors. Before using these products, always contact us for the delivery specification sheet to check the latest specifications.
The product warranty is valid for one year after delivery and is limited to product repair or replacement for defects discovered and reported to us within that one year period. However, even if within the warranty period we accept absolutely no liability for any loss caused by natural disasters or improper product use.
Copying or reprinting the contents described in this material in whole or in part is prohibited without our prior permission.

HAMAMATSU

www.hamamatsu.com

HAMAMATSU PHOTONICS K.K., Solid State Division
1126-1 Ichino-cho, Chuo-ku, Hamamatsu City, 435-8558 Japan, Telephone: (81)53-434-3311, Fax: (81)53-434-5184
U.S.A.: HAMAMATSU CORPORATION: 360 Foothill Road, Bridgewater, NJ 08807, U.S.A., Telephone: (1)908-231-0960, Fax: (1)908-231-1218
Germany: HAMAMATSU PHOTONICS DEUTSCHLAND GMBH: Arzbergerstr. 10, 82211 Herrsching am Ammersee, Germany, Telephone: (49)8152-375-0, Fax: (49)8152-265-8 E-mail: info@hamamatsu.de
France: HAMAMATSU PHOTONICS FRANCE S.A.R.L.: 19 Rue du Saule Trapu, Parc du Moulin de Massy, 91882 Massy Cedex, France, Telephone: (33)1 69 53 71 00, Fax: (33)1 69 53 71 10 E-mail: infos@hamamatsu.fr
United Kingdom: HAMAMATSU PHOTONICS UK LIMITED: 2 Howard Court,10 Tewin Road, Welwyn Garden City, Hertfordshire, AL7 1BW, UK, Telephone: (44)1707-294888, Fax: (44)1707-325777 E-mail: info@hamamatsu.co.uk
North Europe: HAMAMATSU PHOTONICS NORDEN AB: Torshamnsgatan 35, 16440 Kista, Sweden, Telephone: (46)8-509-031-00, Fax: (46)8-509-031-01 E-mail: info@hamamatsu.se
Italy: HAMAMATSU PHOTONICS ITALIA S.R.L.: Strada della Moia, 1 int. 6 20044 Arese (Milano), Italy, Telephone: (39)02-93 58 17 33, Fax: (39)02-93 58 17 41 E-mail: info@hamamatsu.it
China: HAMAMATSU PHOTONICS (CHINA) CO., LTD.: 1201, Tower B, Jiaming Center, 27 Dongsanhuan Beilu, Chaoyang District, 100020 Beijing, P.R. China, Telephone: (86)10-6586-6006, Fax: (86)10-6586-2866 E-mail: hpc@hamamatsu.com.cn
Taiwan: HAMAMATSU PHOTONICS TAIWAN CO., LTD.: 13F-1, No.101, Section 2, Gongdao 5th Road, East Dist., Hsinchu City, 300046, Taiwan(R.O.C) Telephone: (886)3-659-0080, Fax: (886)3-659-0081 E-mail: info@hamamatsu.com.tw