MAICO™

MEMS CONFOCAL UNIT

MAICO® MEMS confocal unit C15890 series

Making
confocal imaging
more accessible

HAMAMATSU
PHOTON IS OUR BUSINESS

MAICO™
MEMS CONFOCAL UNIT

All you need in a compact body

Confocal fluorescence unit installed in your own microscope

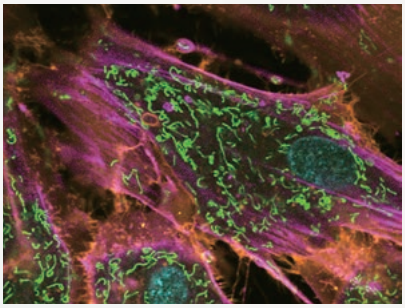

MAICO® MEMS confocal unit is a confocal unit easily installed on your inverted microscope to achieve confocal fluorescence imaging.

This compact, bench-top unit, does not require other devices such as cameras, filters or lasers.

As an entry-level model, or as a sub-model of a high-end confocal fluorescence microscope, MAICO® makes confocal fluorescence imaging more accessible.

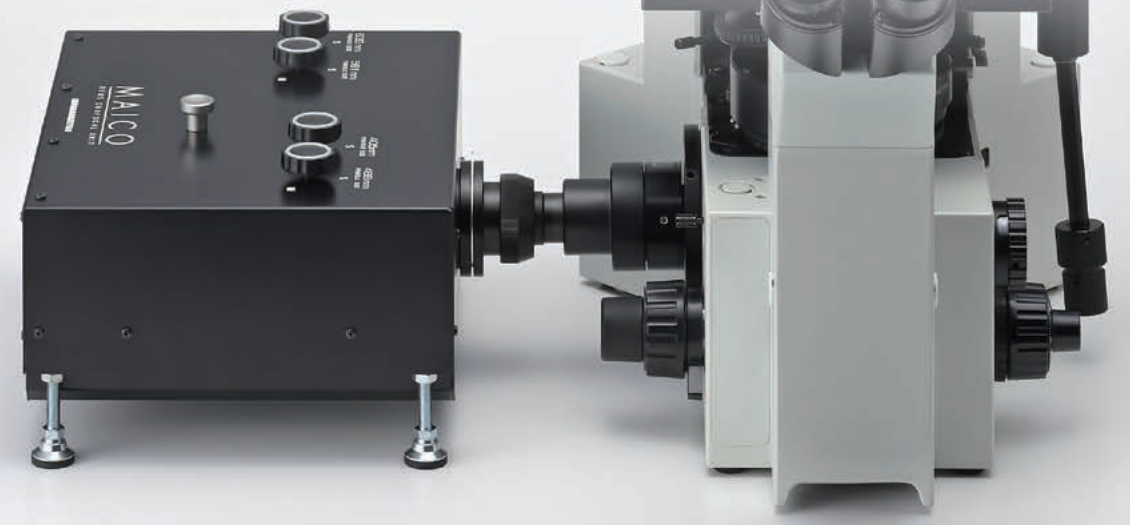

MAICO® is mounted via a side port of the inverted microscope with a C-mount TV adapter.

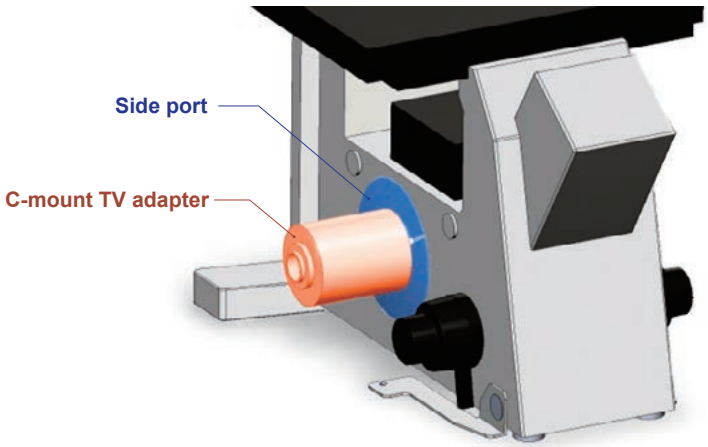

Our modular subunit structure makes adding extra channels easy

MAICO® has a unique subunit structure which contains all the necessary components for each fluorescence band excitation and detection in a single unit.
By adopting the subunit structure you can, for example, select a single fluorescence band when you purchase your first unit. You can then add more imaging channels as your research progresses.
MAICO® supports single channel observation as well as up to four multi-channel (405 nm, 488 nm, 561 nm, and 638 nm) simultaneous excitation and observation.

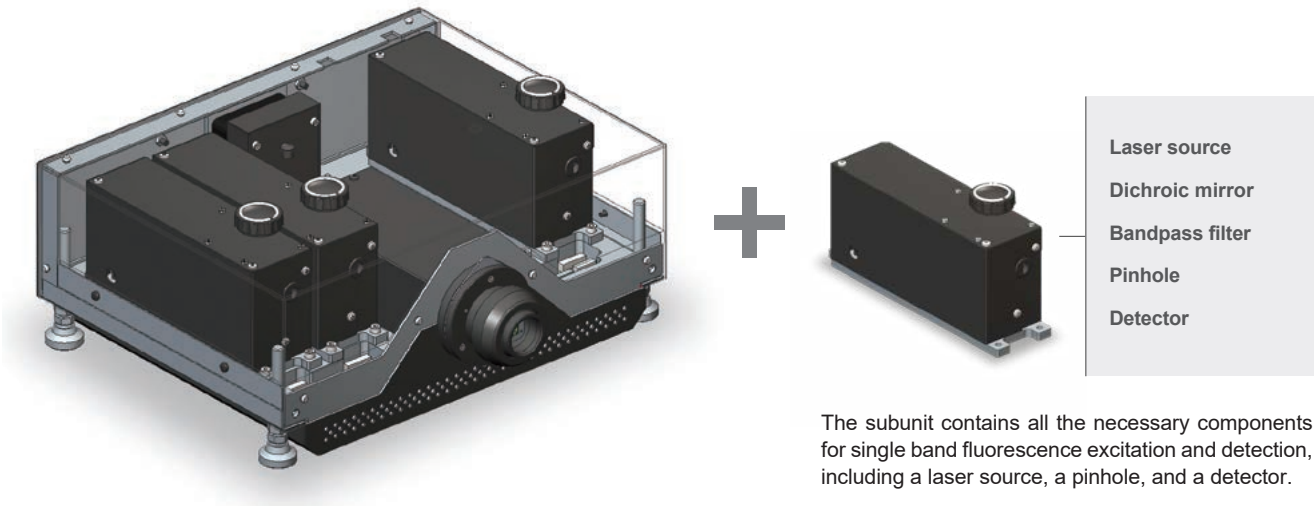

The subunit contains all the necessary components for single band fluorescence excitation and detection, including a laser source, a pinhole, and a detector.

High-sensitivity detectors

Hamamatsu Photonics' detectors have a long track record in the field of fluorescence measurement. By adopting the world's most sensitive detector (photomultiplier tube) and applying our signal processing know-how, we were able to reduce the laser power to a Class 3R with sufficient fluorescence signals.

This has important implications for live cell imaging, such as long time-lapse imaging.

High-speed scanning with MEMS mirror

We adopted our 29 kHz resonant type high-speed MEMS* mirror as a spot scanning device. The MEMS mirror allows for a high-speed scan up to 76 frames/s and can be used for high-speed phenomena such as Ca^{2+} dynamics.

The high-speed resonant scanning system reduces laser irradiation time, which enables low phototoxicity, low photobleaching and high-efficiency observation of live cells as well as fixed samples.

High-speed scanning allows for comfortable observation at high resolution with minimal display delay when searching for and focusing on samples.

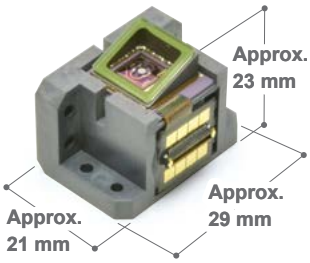

Our MEMS mirror developed for applications such as laser scanning microscopy.

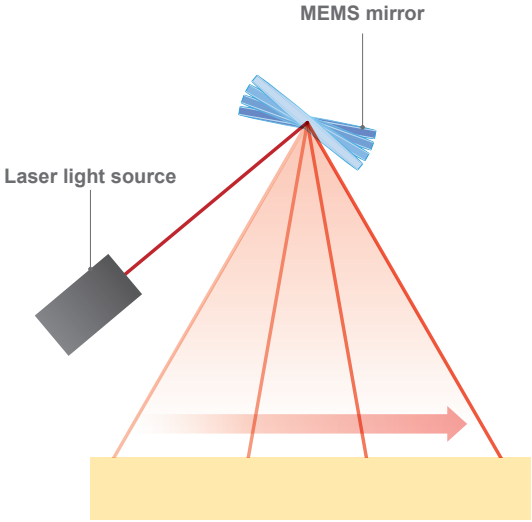

A light spot is scanned at 29 kHz resonant frequency.

* MEMS = Micro-Electro-Mechanical Systems

Conventional confocal optics

MAICO® was designed to comply to the conventional confocal optics, which has a long history, using a spot scanning device and pinholes to acquire optical sectioning images.

When imaging thick fluorescence samples, only the fluorescence emitted from the focal plane of the objective passes through the pinholes to the detector, while fluorescence emitted from further away from the focal plane is blocked.

It detects quantitative, reproducible and reliable signals. It also acquires high contrast images without the need for image processing techniques, such as deconvolution.

MAICO® image

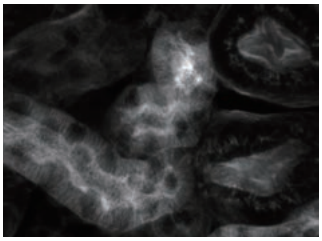

Widefield microscope image

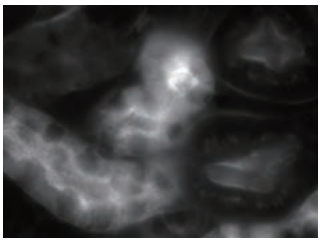

Sample: Mouse kidney section

MAICO® detects fluorescence in the objective focal plane only, so high contrast optical sectioning images can be acquired.

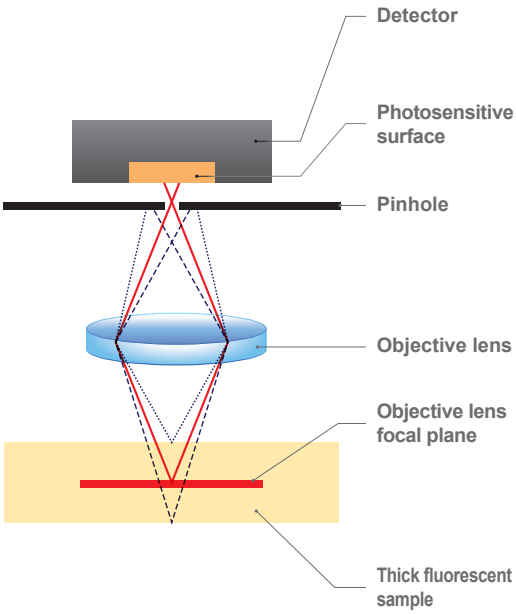

No laser control area required

As MAICO® utilizes our most sensitive detectors and signal processing know-how, we were able to successfully reduce the laser power to a Class 3R. Therefore, you can use MAICO® in a normal laboratory environment, without the need for a laser controlled area.

Software support

MAICO® is compatible with DCAM-API®, a common camera library, and can be controlled by Hamamatsu's HCImage software. It is also possible to acquire images with DCAM-API® compatible third party software.

Enable simultaneous multiband confocal acquisition without bleed-through (Patent pending)

Conventional simultaneous multiband observation

Fluorescent dyes emit a wide wavelength range of fluorescence, and if multiple fluorescent dyes are used, the fluorescence distributions are generally overlapped. When multiple dyes are excited simultaneously, an overlapping emission spectrum leaks into adjacent detection channels, causing an artifact of fluorescence imaging called bleed-through. The bleed-through cannot be prevented by simply using a dichroic mirror or a bandpass filter to select the wavelength, and this has been a problem.

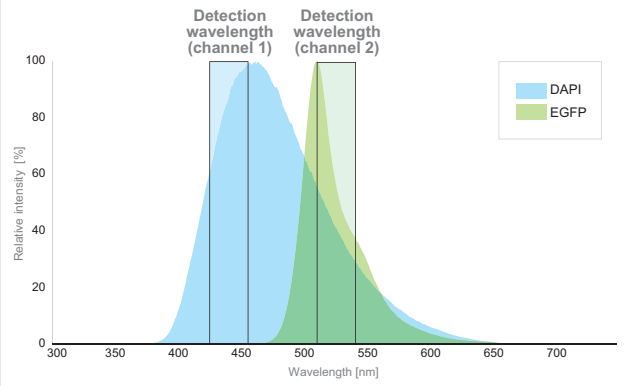

DAPI (channel 1) image

EGFP (channel 2) image

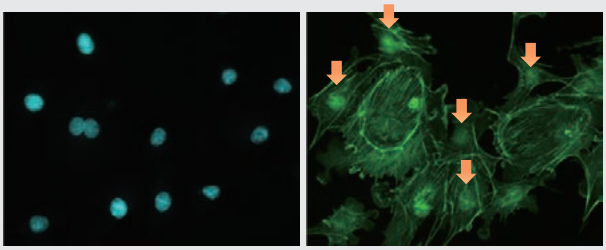

DAPI fluorescence leaks into the EGFP detection channel and causes artifact shapes of the nucleus in EGFP image. (Images are shown in pseudo-color.)

Newly developed

Simultaneous multiband observation without bleed-through

Since MAICO® has a subunit structure, we can design the light path in each subunit independently. This minimizes the bleed-through to adjacent subunits and enables simultaneous multiband observation with high detection efficiency.

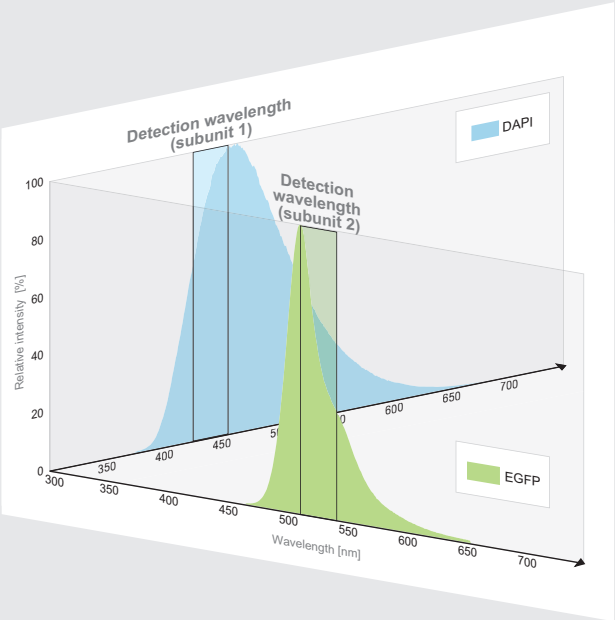

DAPI (subunit 1) image

EGFP (subunit 2) image

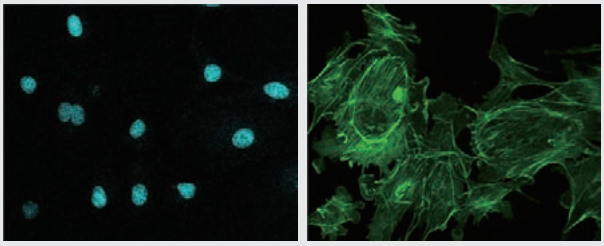

Simultaneous multiband excitation does not cause DAPI fluorescence bleed-through into the EGFP detection channel, and each fluorescent dye image is acquired accurately. (Images are shown in pseudo-color.)

Imaging examples

MAICO™
MEMS CONFOCAL UNIT

Live cell four-color imaging

Confocal imaging of cell nucleus, mitochondria, cell membrane, and actin filament with different dyes and channels. Each structure is clearly observed.

Sample: H9c2 cell line
Objective lens: 60×
Number of scan lines: 960
Laser wavelength: 405 nm, 488 nm, 561 nm, 638 nm

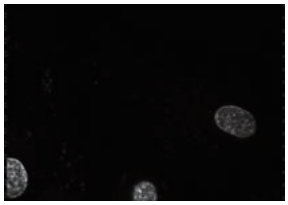

Wavelength 405 nm: Cell nucleus (HCS NuclearMask)

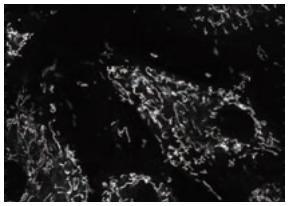

Wavelength 488 nm: Mitochondria (MitoTracker)

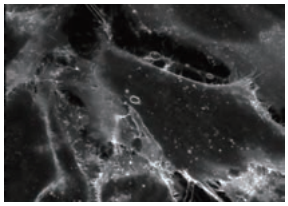

Wavelength 561 nm: Cell membrane (CellMask)

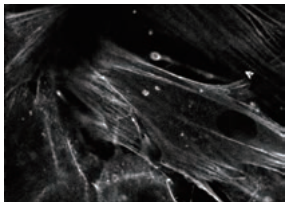

Wavelength 638 nm: Actin (SiR-Actin)

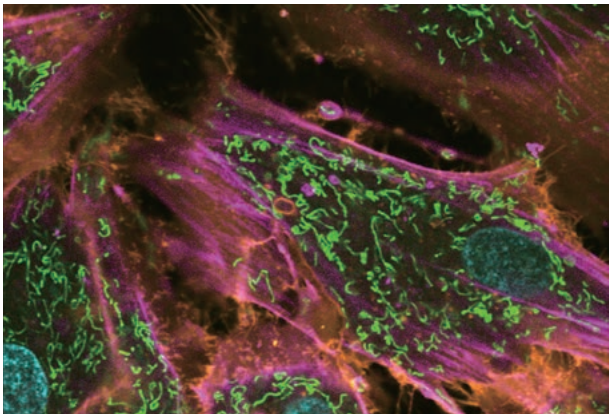

Superimposed four-color fluorescence image. (Image is shown in pseudo-color.)

Z-section imaging of mouse brain

These confocally sectioned images show that the structure of the cells and neurons in this thick section of mouse brain are pyramidal in volumetric shape.

Sample and images courtesy of Dr. Christian Jüngst and Dr. Astrid Schauss (CECAD Imaging Facility, University of Cologne)
Sample: Fixed sample of transgenic mouse brain (Thy1-eYFP)
Objective lens: 20× (NA: 0.40)
Laser wavelength: 488 nm

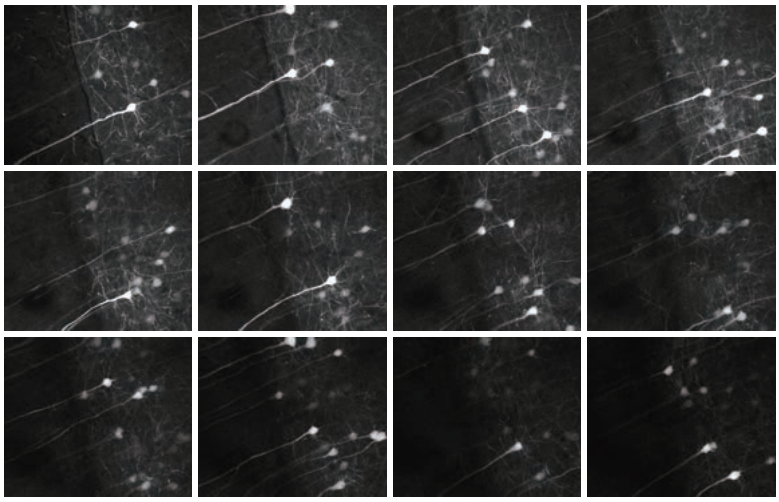

These images were acquired in 5 µm steps across a 200 µm thickness in tissue. Images shown in every 3 slices.

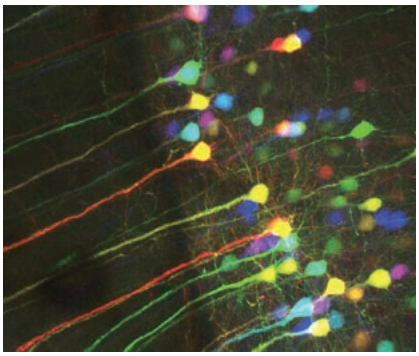

Superimposed image with different pseudo-colors for each Z position.

Imaging examples

MAICO™
MEMS CONFOCAL UNIT

Actin structural imaging of mouse tracheal epithelial cells

The actin structure in the cell can be clearly observed.

Sample and image courtesy of Kyosuke SHINOHARA Ph.D. Associate Professor, Department of Biotechnology and Life Science, Graduate School of Technology, Tokyo University of Agriculture and Technology
Sample: Mouse tracheal epithelial cell (Phalloidin-Alexa568)
Objective lens: 100× (NA: 1.30)
Laser wavelength: 561 nm

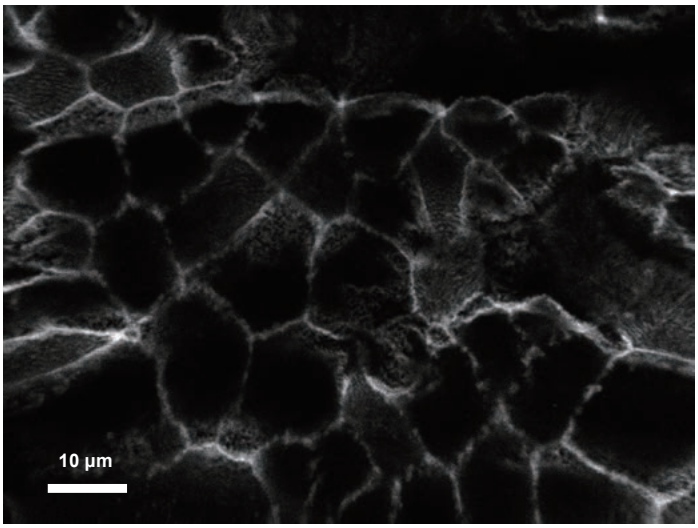

Application examples

- Live cell imaging
- High-speed Ca^{2+} imaging
- Membrane potential dye imaging
- Time-lapse imaging
- 3D/4D imaging

Selectable wavelength and detection sensitivity

Choose from 3 choices
Main unit

	Type number	Wavelength	Detector
Main unit	C15890-405N	405 nm	Standard type
	C15890-488N	488 nm	
	C15890-488S	488 nm	High sensitivity type (Crystalline photocathode/GaAsP)

The A15892-01 mechanical shutter is available as a factory option.

Up to 4 imaging channels can be supported if you add
Subunit

	Type number		Wavelength	Detector
	Purchased with the main unit	Add or replace at a later date		
Subunit	A15889-405N	A15891-405N	405 nm	Standard type
	A15889-488N	A15891-488N	488 nm	
	A15889-561N	A15891-561N	561 nm	
	A15889-638N	A15891-638N	638 nm	
	A15889-488S	A15891-488S	488 nm	High sensitivity type (Crystalline photocathode/GaAsP)
	A15889-561S	A15891-561S	561 nm	
	A15889-638S	A15891-638S	638 nm	

It is not possible to install two or more subunits with the same laser wavelength. Also, replacement of the detector alone is not possible.
Different laser lines and their detectors can be added or removed based on the subunit selection.

Specifications

MAICO™
MEMS CONFOCAL UNIT

Specifications

Type number		C15890 series
Maximum effective field of view		8.0 mm × 6.0 mm
Maximum number of pixels		1280 (H) × 960 (V)
Image size		1280 (H) × 960 (V) 1280 (H) × 480 (V) 1280 (H) × 240 (V)
Frame rate (Typ.)	960 scanning lines	19 frames/s
	480 scanning lines	38 frames/s
	240 scanning lines	76 frames/s
Zoom function		1×, 2×
Excitation laser*1		405 nm, 488 nm, 561 nm, 638 nm
Laser class		Class 3R
Detection wavelength	at 405 nm excitation	425 nm to 465 nm
	at 488 nm excitation	510 nm to 540 nm
	at 561 nm excitation	580 nm to 619 nm
	at 638 nm excitation	660 nm to 730 nm
Detector*2		PMT, high-sensitivity GaAsP PMT
Digital output		12 bit
Image acquisition mode		Single channel measurement, multiple channel sequential measurement (frame by frame), multiple channel simultaneous measurement (up to 4 channels)
Pinhole*3		3 manual selections (large/medium/small) for each wavelength
Compatible objective lens*4		Magnification 20× to 100×
Interface		USB 3.0
Output trigger connector		SMA
Lens mount		C-mount
Power consumption		90 VA
Ambient operating temperature		+18 °C to +28 °C
Ambient operating humidity		30 % to 80 % (with no condensation)
Ambient storage temperature		−10 °C to +50 °C
Ambient storage humidity		85 % (with no condensation)

*1 The C15890 series is provided with a single wavelength of 405 nm or 488 nm. Supports up to 4 wavelengths by addition of subunits.
*2 Equipped with the same number of lasers.
*3 The pinhole size can be read out as accessory information at the time of measurement.
*4 We recommend use of an objective lens with an image-side NA (objective lens NA/magnification) smaller than 0.0375.

Laser safety

MAICO® MEMS Confocal Unit is a Class 3R laser product. Conforming to international laser safety standards (IEC 60825-1), which obligate manufacturers to provide preventive safety measures, Hamamatsu lasers are classified, and appropriate safety measures and labeling are provided. During operation, users must also use their preventive safety measures according to laser-related regulations.

▲ Description label (sample)

▲ Caution label

MAICO® is equipped with a key switch and an interlock circuit. If necessary, connect to the safety device via the interlock connector (EIAJ RC5320A TYPE4, M04-390DJ Marushin electric mfg. Co).

System configuration example

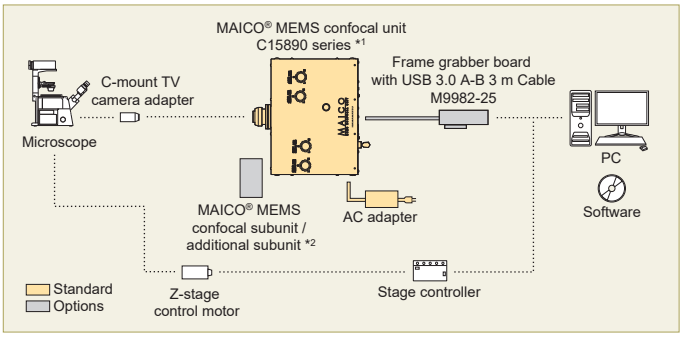

*1 C15890-405N, -488N, -488S
*2 For the details of the lineup, refer to page 7.

Option

Type number	Product name
A15892-01	MAICO® MEMS confocal mechanical shutter
A15892-488	MAICO® MEMS confocal optical adjustment glass
A15892-638	MAICO® MEMS confocal optical adjustment glass
M9982-25	Frame grabber board with USB 3.0 A-B 3 m Cable
U11158-02	HCImage Acquisition Software
U11158-08	HCImage Live Software

*You are able to add these options only at the time of purchase of the main unit. These can not be added after shipping.

Dimensional outlines (Unit: mm)

■ Weight: Approx. 8.7 kg
(with mechanical shutter and 4 subunits installed)

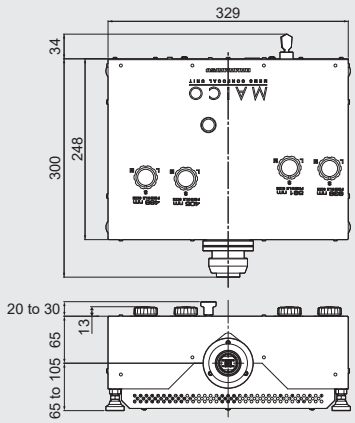

● Back panel components

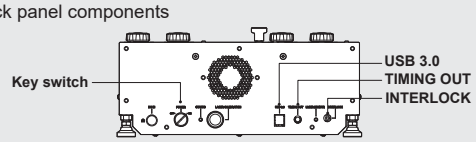

● DCAM-API and MAICO are registered trademarks of Hamamatsu Photonics K.K. (EU , Japan , UK , USA)
● The product and software package names noted in this brochure are trademarks or registered trademarks of their respective manufactures.
● The products described in this brochure are designed to meet the written specifications, when used strictly in accordance with all instructions.
● The university, institute, or company name of the researchers, whose measurement data is published in this brochure, is subject to change.
● The measurement examples in this brochure are not guaranteed.
● Specifications and external appearance are subject to change without notice.
© 2024 Hamamatsu Photonics K.K.

HAMAMATSU PHOTONICS K.K. www.hamamatsu.com

Systems Division
812 Joko-cho, Chuo-ku, Hamamatsu City, 431-3196, Japan, Telephone: (81)53-431-0124, Fax: (81)53-433-8031, E-mail: export@sys.hpk.co.jp
U.S.A.: HAMAMATSU CORPORATION: 360 Foothill Road, Bridgewater, NJ 08807, U.S.A., Telephone: (1)908-231-0960, Fax: (1)908-231-1218
Germany: HAMAMATSU PHOTONICS DEUTSCHLAND GMBH.: Arzbergerstr. 10, 82211 Herrsching am Ammersee, Germany, Telephone: (49)8152-375-0, Fax: (49)8152-265-8 E-mail: info@hamamatsu.de
France: HAMAMATSU PHOTONICS FRANCE S.A.R.L.: 19 Rue du Saule Trapu, Parc du Moulin de Massy, 91882 Massy Cedex, France, Telephone: (33)1 69 53 71 00, Fax: (33)1 69 53 71 10 E-mail: infos@hamamatsu.fr
United Kingdom: HAMAMATSU PHOTONICS UK LIMITED: 2 Howard Court,10 Tewin Road, Welwyn Garden City, Hertfordshire, AL7 1BW, UK, Telephone: (44)1707-294888, Fax: (44)1707-325777 E-mail: info@hamamatsu.co.uk
North Europe: HAMAMATSU PHOTONICS NORDEN AB: Torshamnsgatan 35 16440 Kista, Sweden, Telephone: (46)8-509 031 00, Fax: (46)8-509 031 01 E-mail: info@hamamatsu.se
Italy: HAMAMATSU PHOTONICS ITALIA S.R.L.: Strada della Moia, 1 int. 6, 20044 Arese (Milano), Italy, Telephone: (39)02-93 58 17 33, Fax: (39)02-93 58 17 41 E-mail: info@hamamatsu.it
China: HAMAMATSU PHOTONICS (CHINA) CO., LTD.: 1201 Tower B, Jiaming Center, 27 Dongsanhuan Beilu, Chaoyang District, 100020 Beijing, P.R. China, Telephone: (86)10-6586-6006, Fax: (86)10-6586-2866 E-mail: hpc@hamamatsu.com.cn
Taiwan: HAMAMATSU PHOTONICS TAIWAN CO., LTD.: 13F-1, No.101, Section 2, Gongdao 5th Road, East Dist., Hsinchu City, 300046, Taiwan(R.O.C), Telephone: (886)3-659-0080, Fax: (886)3-659-0081 E-mail: info@hamamatsu.com.tw

Cat. No. SCAS0148E05
JUN/2024 HPK
Created in Japan